SELLA

Redefining Office Seating and Durability. The Sella chair draws inspiration from the modern workplace, where individuals constantly move around for work and meetings. With minimal adjustments desired, Sella offers the perfect solution. Designed as a work chair, Sella abandons technical appearances in favor of a soft, human-like shape. Its naturally curved S-shaped back provides optimal comfort to all users, eliminating the need for manual adjustments.

We have conducted extensive testing to ensure the strength and durability of the back-rest, which can withstand over 120,000 recline cycles – twice as strong as the BIFMA requirement of 300 pounds.



SELLA



Features

- 4-position tilt lock
- 3:1 back-to-seat tilt ratio
- Optional 3D knitted mesh material for the backrest
- Seamless backrest design (no visible tooling marks)
- Weight balance and center knob tension adjustment
- 360° swivel capability
- Pneumatic cylinder for height adjustment
- Seat depth adjustment
- Backrest reclining exceeds 120,000 times, supports up to 300 pounds
- Quick and easy installation process

Package	1 piece per package
Carton size	71 * 32 * 64 cm
Quantity per 40HQ container	478

Certifications

BIFMA

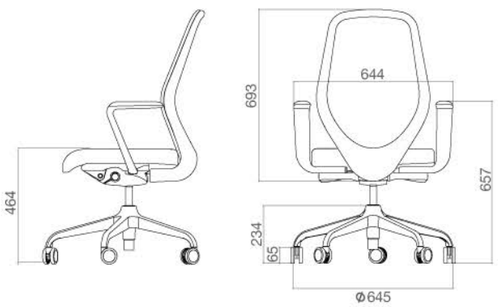

Various Standard Options



OM-SE-001-M2A1-D

- Nylon backrest (black) with 3D knitted mesh
- Fixed nylon armrests (black) with PU surface
- DUNATI weight-sensitive mechanism with 4 locking positions, seat depth adjustment, and molded foam
- 325mm aluminum base (black)
- D60 nylon casters (black)



OM-SE-002-M2A1-D

- Nylon backrest (black) with 3D knitted mesh
- Fixed nylon armrests (black) with PU surface
- DUNATI weight-sensitive mechanism with 4 locking positions, seat depth adjustment, and molded foam
- 325mm nylon base (black)
- D60 nylon casters (black)



OM-SE-001-M2A2-D

- Nylon backrest (black) with 3D knitted mesh
- DUNATI 4D armrests
- DUNATI weight-sensitive mechanism with 4 locking positions, seat depth adjustment, and molded foam
- 325mm aluminum base (black)
- D60 nylon casters (black)



OM-SE-002-M2A2-D

- Nylon backrest (black) with 3D knitted mesh
- DUNATI 4D armrests
- DUNATI weight-sensitive mechanism with 4 locking positions, seat depth adjustment, and molded foam
- 325mm nylon base (black)
- D60 nylon casters (black)

