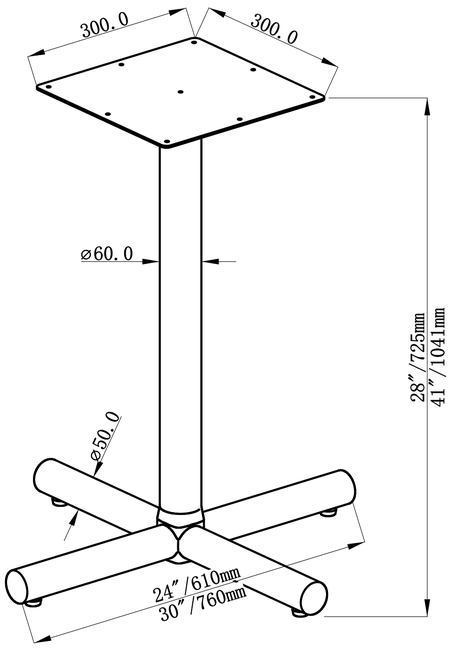
300.0
300.0
⌀60.0
28″/725mm
41″/1041mm
⌀50.0
24″/610mm
30″/760mm

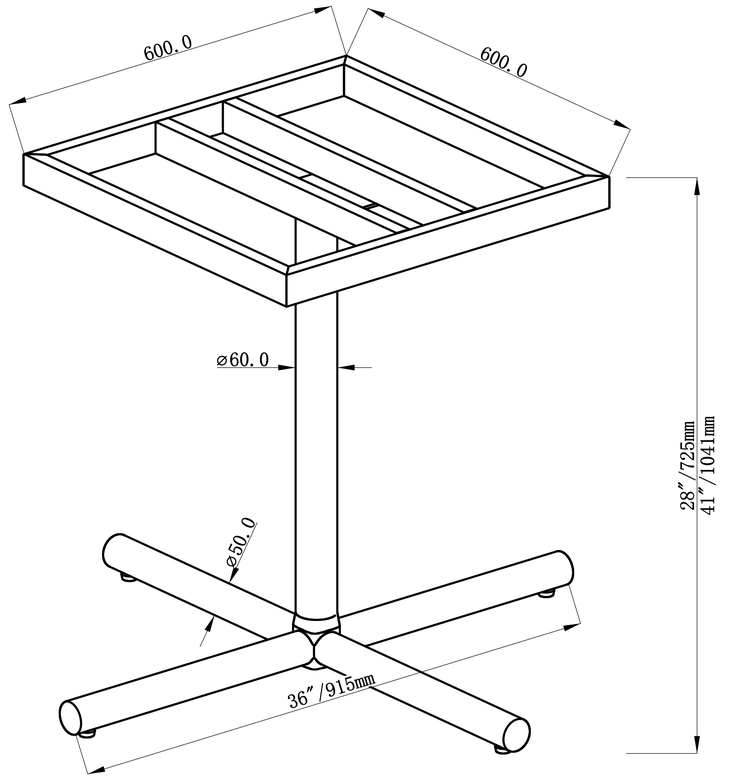
600.0
600.0
⌀60.0
28″/725mm
41″/1041mm
⌀50.0
36″/915mm

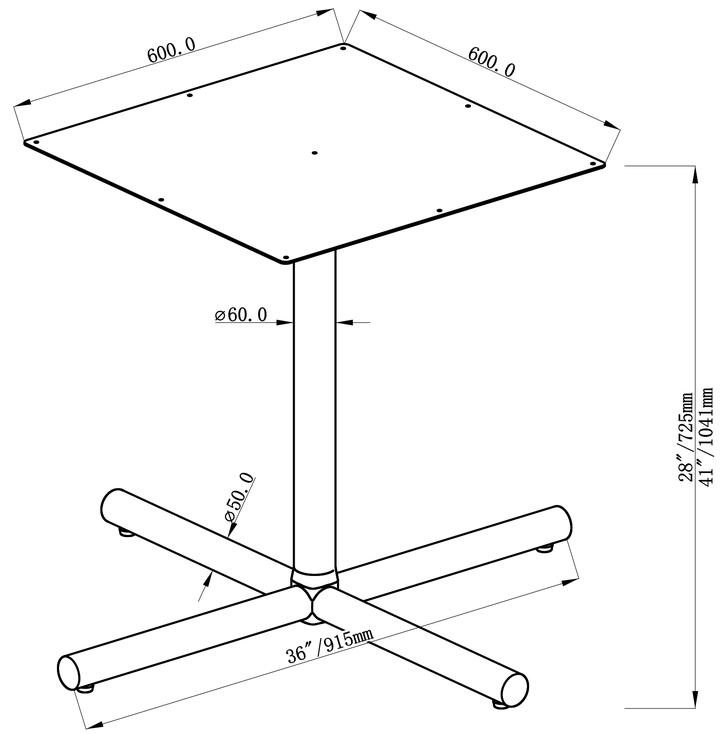
600.0
600.0
⌀60.0
28″/725mm
41″/1041mm
⌀50.0
36″/915mm